Thule Canyon XT
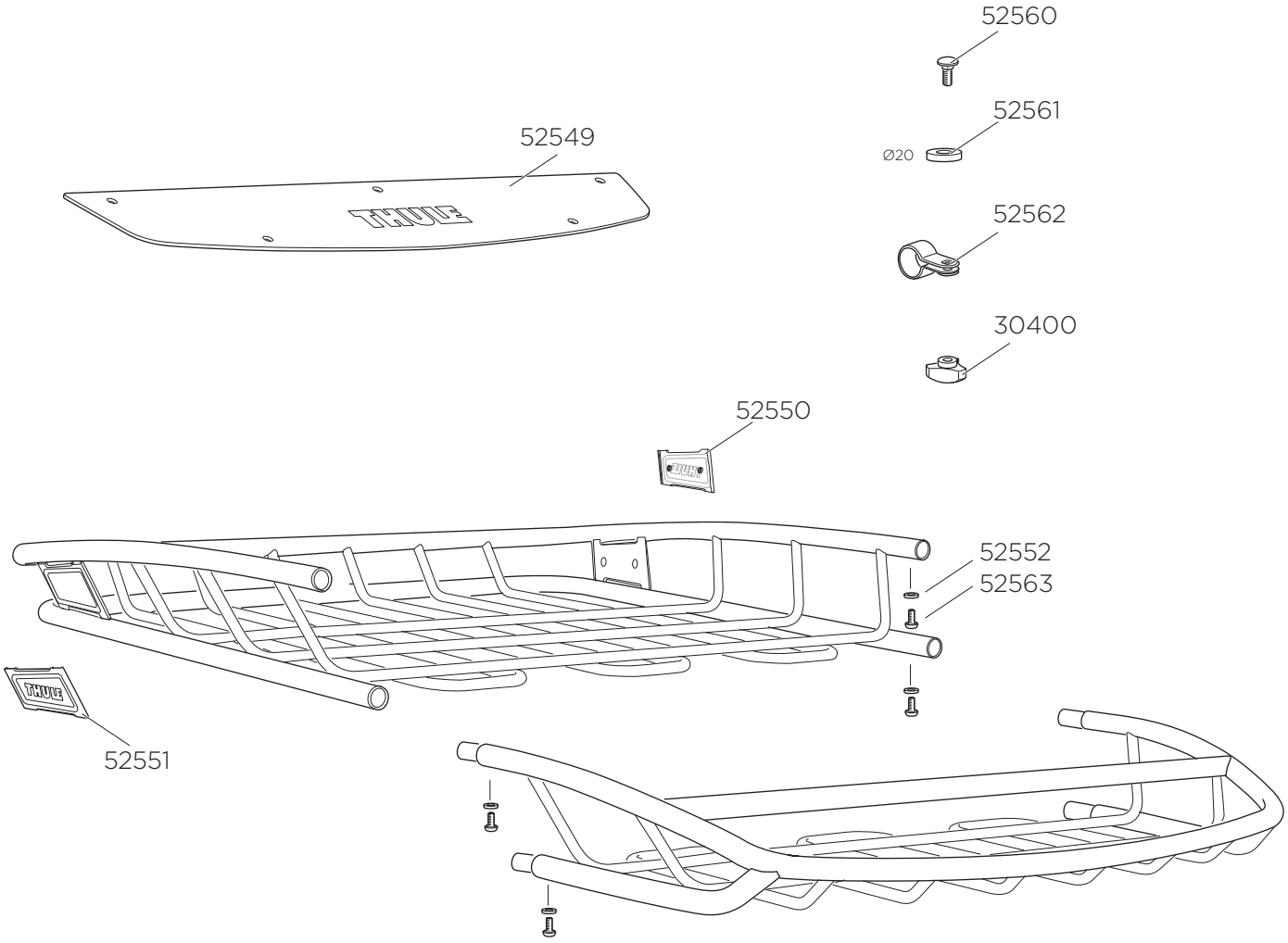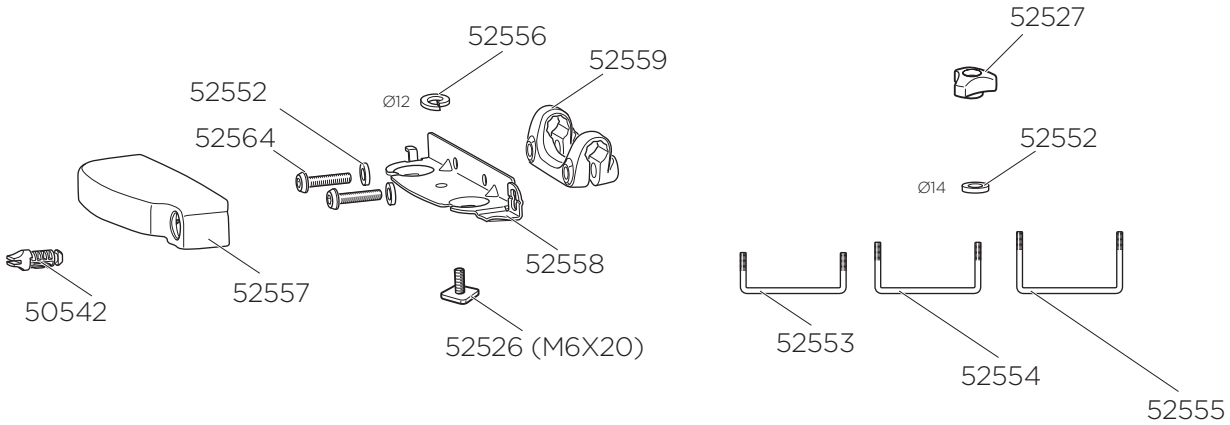
859